World Wide Journal of Multidisciplinary Research and Development

WWJMRD 2017; 3(6): 76-80
www.wwjmrd.com
Impact Factor MJIF: 4.25
e-ISSN: 2454-6615

Sadullaev Nasullo Nematovich
Vice-Rector on Scientific Activities at Bukhara Engineering-Technological Institute, Republic Uzbekistan

Shoboev Alisher Hikmatilloevich
doctorate at department of electrical engineering Bukhara Engineering-Technological Institute, Republic Uzbekistan

Nematov Shukhrat Nasilloevich
Assistant at department of electrical engineering Bukhara Engineering-Technological Institute, Republic Uzbekistan

Correspondence:
Sadullaev Nasullo Nematovich
Vice-Rector on Scientific Activities at Bukhara Engineering-Technological Institute, Republic Uzbekistan

Monitoring of indicators of the power consumption with use of matrix model of system of electro supply of the enterprise

Sadullaev Nasullo Nematovich, Shoboev Alisher Hikmatilloevich, Nematov Shukhrat Nasilloevich

Abstract
In article the principle of construction of model of system of electro supply in the form of the matrix equations is stated. The matrix of a condition for calculation of analytical data of the scheme of electro supply is received. Three-dimensional daily graphics of a power consumption of technological consumers of the enterprise, and also curve changes of losses in cable lines of system of electro supply of the enterprise are received.

Keywords: power consumption monitoring, mathematical model, electro supply system, matrix equations, a cable line, minimization of losses, modelling of system of the electro supply, the automated calculation, parameters of the scheme of electro supply, power loss

Introduction

The solution of a problem of an effective utilization of the electric power is possible on the basis of studying of a power consumption's formation laws, the reception of the authentic the forecast estimations of expense of the electric power, increase of scientific validity and accuracy of its planned values and norms, management of power consumption modes.

Creation of more effective usage methods energy audit and information systems on research energy efficiency assumes deeper and detailed analysis of possibilities of energy economy with use of more perfect mathematical power supply system's model. Modern personal computers allow using more exact and detailed mathematical models, opening the new possibilities in application of theoretical workings out. Here priority is the creation of mathematical models of the industrial network, which allows to detail power streams on branches and node points of system of electro supply (SES), and also to state a quantitative estimation to power losses and to specify sites and the reasons of their occurrence.

Taking into account the problems set forth above we will formulate the basic requirements to mathematical model SES:

1. The universality of model providing research of every possible variants of the scheme of electro supply of the various enterprises.
2. The uniform calculation providing formation of power balances on all levels of system of electro supply.
3. Programming of calculations and database creation on an enterprise power consumption.
4. Possibility of automatic reading and data exchange with external programs, and also visual representations of operating modes in real time.

Models of power balances at which construction the mathematical apparatus of matrix algebra [1] is used, provide on elements calculation of variable parameters of the scheme of electro supply, drawing up of power balance on electro supply steps, and also calculation of indicators energy efficiency manufactures.

Theoretical Part

The principle of creation of model SES of the enterprise with the matrix equations is based on drawing up of a matrix of the data characterizing parameters of the scheme and elements SES of the enterprise [1]. Matrixes are made on transformers or on transformer substations

(TSS) SES, each of which is described by the two-dimensional matrix equations. Maximum number distributive points (DP) in TSS, and consumers in DP define the sizes of a matrix. To absent elements SES of a matrix zero values are appropriated.

Mathematical model SES represents the multidimensional matrix consisting of several two-dimensional matrixes. The two-dimensional matrix describes the elements, eating from the separate transformer. The sizes of a matrix depend on steps SES, number of distributive points and a technological electric equipment. Mathematical model SES consists of set of the equations used at calculation of loadings, losses, technical and economic indicators SES, etc. Calculation SES is carried out by operations of matrix algebra in "mat lab" or «Delphi» [2].

Drawing up of matrix model SES of the enterprise we will consider on an example of the scheme of electro supply grinding plant. The transformer T-1 provide a mill in the plant. Transformer T-1 has 4 distributive points providing energy 89 motors of technological installations. From them 12 from DP-1, 22 from DP-2, 29 from DP-3, 26 from DP-4. Accordingly, the sizes of a matrix describing transformer T-1 consumers will be $P_{т1}$ (4, 29). Number DP (4) describes to number of lines, the number maximum consumers (DP-1, 29) describes to number of columns of a matrix.

At drawing up of a matrix of the data characterizing elements SES some simplifications are accepted. In particular, some identical consumers with identical cable line (CL) in the scheme are noted as one consumer. It allows simplifying essentially at insignificant errors electro supply scheme and calculation of indicators of power consumption. After scheme simplification it is received the settlement scheme for drawing up of matrix model SES of transformer T-1 (fig. 1). In calculations matrixes of data without simplifications which were bulky are used also and results have caused a stir slightly. Therefore, it is offered to use the optimized structure of a matrix of data for calculations.

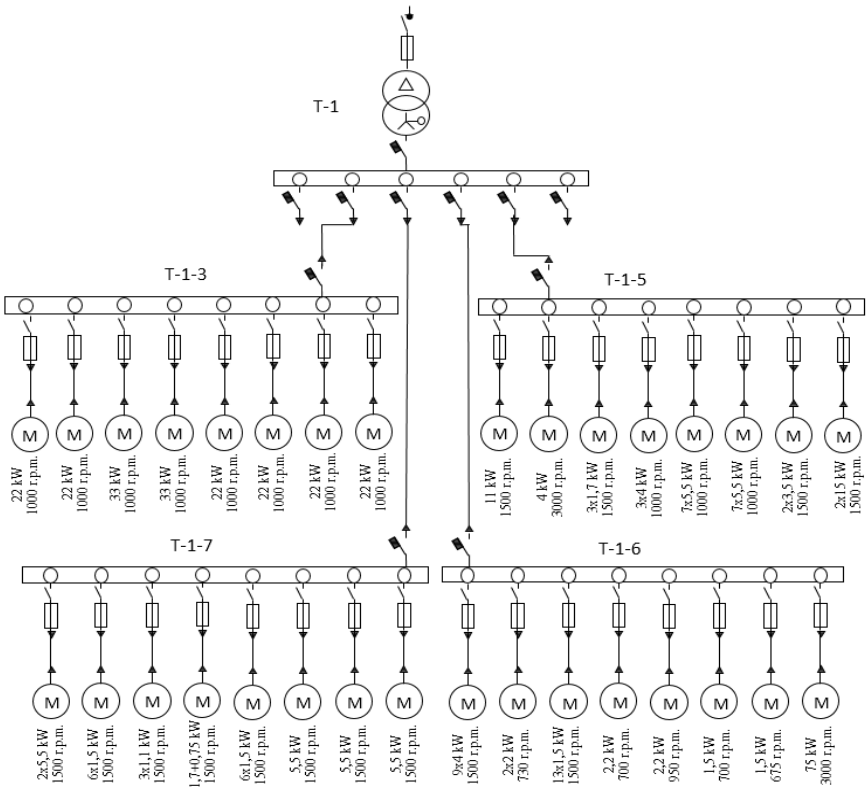

Fig.1: Connection layout consumers of transformer T-1.

The matrix of data of active power of the technological equipment, connected to transformer T-1 will be as following:

$$P_{мел}(4,8) = \begin{vmatrix} P_{12} & P_{12} & P_{13} & P_{14} & P_{15} & P_{16} & P_{17} & P_{18} \\ P_{21} & P_{22} & P_{23} & P_{24} & P_{25} & P_{26} & P_{27} & P_{28} \\ P_{31} & P_{32} & P_{33} & P_{34} & P_{35} & P_{36} & P_{37} & P_{38} \\ P_{41} & P_{42} & P_{43} & P_{44} & P_{45} & P_{46} & P_{47} & P_{48} \end{vmatrix} =$$

$$= \begin{vmatrix} 11 & 9 & 3{,}3 & 2{,}45 & 9 & 5{,}5 & 5{,}5 & 5{,}5 \\ 22 & 22 & 33 & 33 & 22 & 22 & 22 & 22 \\ 36 & 4 & 19{,}5 & 2{,}2 & 2{,}2 & 1{,}5 & 1{,}5 & 75 \\ 11 & 4 & 5{,}1 & 12 & 38{,}5 & 38{,}5 & 7 & 30 \end{vmatrix}$$

For formation of power balance it is necessary calculation of losses in cable lines feeding consumers. On the basis of these data are determined by the power loss to the CL the following formula:

$$\Delta P_{cl}(i,j) = 3 \cdot I_{cl}^2(i,j) \cdot R_0(i,j) \cdot l_{cl}(i,j), \qquad (2)$$

Where $l_{cl}(i,j)$ and $R_0(i,j)$ – respectively the length and specific active resistance to the CL consumers.

For the calculation of the power loss in the cable lines are used data matrix length and specific active resistance CL:

$$l_{кл}(4,8) = \begin{vmatrix} 0.015 & 0.016 & 0.08 & 0.025 & 0.026 & 0.021 & 0.012 & 0.013 \\ 0.025 & 0.012 & 0.018 & 0.02 & 0.03 & 0.025 & 0.033 & 0.04 \\ 0.003 & 0.017 & 0.012 & 0.022 & 0.018 & 0.022 & 0.007 & 0.01 \\ 0.013 & 0.015 & 0.011 & 0.024 & 0.019 & 0.023 & 0.017 & 0.035 \end{vmatrix}$$

$$R_{0,кл}(i,j) = \begin{vmatrix} 3 & 3 & 3.12 & 3.12 & 3 & 3.12 & 3.12 & 3.12 \\ 3 & 3 & 2.06 & 2.06 & 3 & 3 & 3 & 3 \\ 2.06 & 3.12 & 3 & 3.12 & 3.12 & 3.12 & 3.12 & 0.64 \\ 3 & 3.12 & 3.12 & 3 & 1.98 & 1.98 & 3.12 & 2.06 \end{vmatrix}$$

Results of calculations of a two-dimensional matrix characterize a condition of a power consumption of the enterprise during the certain moment of time. If power consumption modes on time are investigated, the three-dimensional matrix in which the two-dimensional matrix changes on time is used.

Experimental Part

On the basis of indications of systems of the account and measurements the base of initial data for calculation of indicators of power consumption is made. Reading out these data matrix model SES defines losses in elements of the scheme of electro supply. On fig. 2 the three-dimensional graphics of a power consumption of consumers DP-1 is shown at two-shift work of a mill.

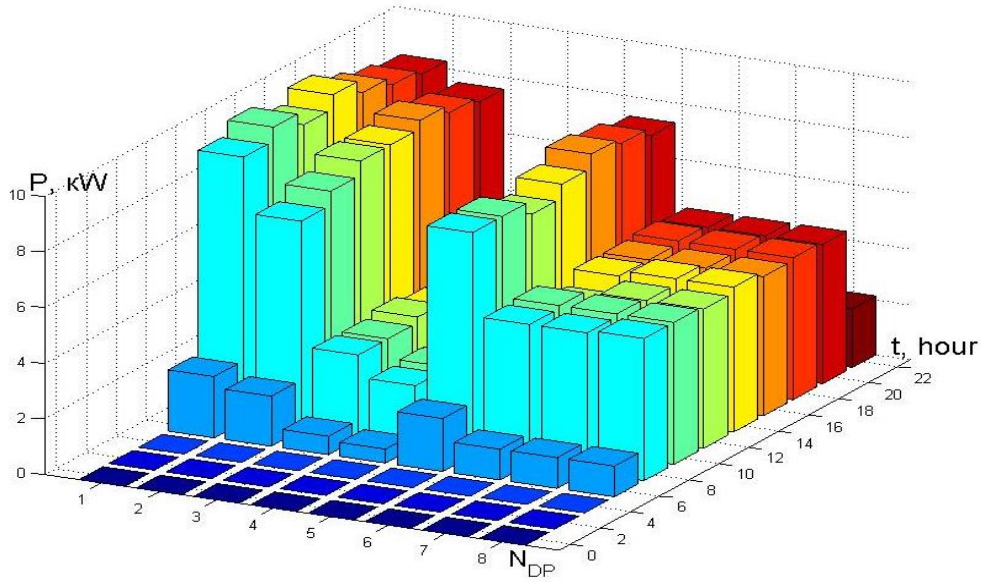

Fig. 2: The process of a daily power consumption of consumers DP-1 of transformer T-1.

In conformity with this graphics power consumption defined power losses in cable lines, feeding these consumers. On fig. 3. Curves of change of power losses in CL, connected to DP-1 are shown, at two-shift work of the enterprise.

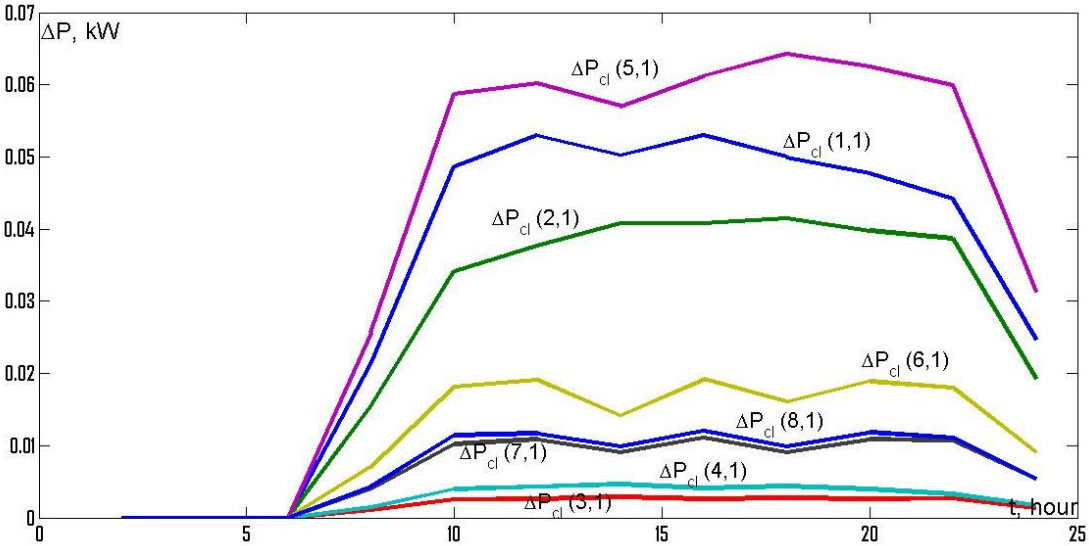

Fig. 3: Curves of change of power losses in CL, connected to DP-1.

In such order graphics of a power consumption and power loss in KL on others DP transformer T-1 are defined. On fig. 4 the three-dimensional schedule of a power consumption of consumers DP-2 is shown. On fig. 5 power losses CL, connected to DP-2 are shown.

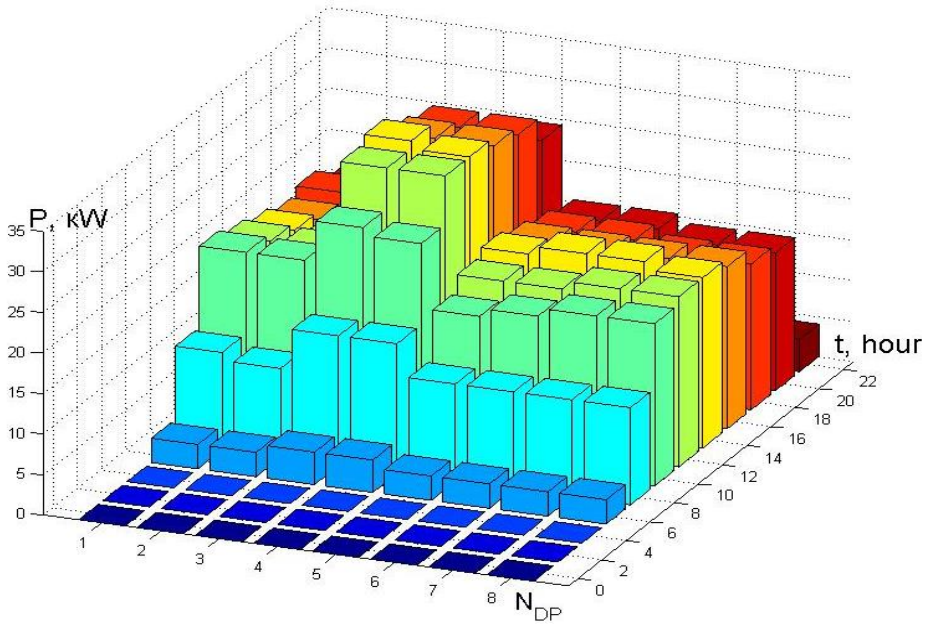

Fig. 4: The process of a daily power consumption of consumers DP-2 of transformer T-1.

On DP-2 identical consumers with an identical mode of power consumption are connected basically. On it 2 technological installations (TI) with motors power of 22 kW and 14 TI with motors power of 11 kW are included.

At drawing up of a matrix of data identical consumers number cable lines DP-2 taking into account their power is integrated and reduced.

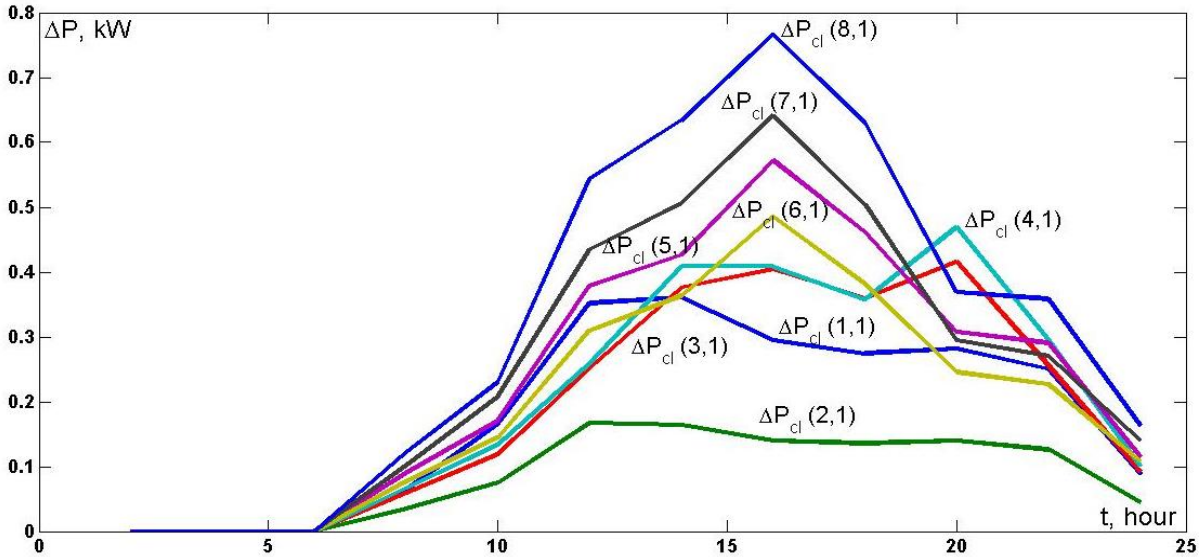

Fig. 5: Curve changes of power losses in cable lines DP-2.

Discussion

On the basis of the initial data received from of the account and measurements systems SES computer model provides following analytical data:

- Value of power losses on elements and on nodes layouts (steps) SES the enterprises;
- graphics of consumed active and reactive energy on workshops and as a whole the enterprise;
- Power factors (EFFICIENCY and cos φ) SES the enterprises at electric power transfer to consumers.

Advantages of application of matrix model SES in power inspections of the enterprises is the following:

- Convenience in automation of calculations of indicators of a power consumption and drawing up of model SES of the enterprise;
- per-element calculation of losses of the power, being the most exact method of calculation of power losses of electric networks and the detailed analysis of total losses of capacity on each central points of a distributive network;
- Universality of the program, i.e. possibility of application of the program at any configurations of the scheme of a distributive network;
- The informative results of calculation and automatic reception of analytical data on a power consumption of an industrial network, and visually representations of operating modes in real time.

Conclusion

Analytical researches of indicators of a power consumption with use of matrix models SES of the enterprise have

shown possibility of their application at the decision of following problems:

- Monitoring of indicators of a power consumption of the enterprise for rational management's power department the enterprises;
- Carrying out internal and external energy audit the enterprises;
- Forecasting and planning of modes of a power consumption of the enterprise;
- Diagnostics and forecasting of damages and failures in SES the enterprises;

The-control of efficiency of functioning SES of the enterprise

Computer model SES of the enterprise probably to integrate into system of the commercial and technical account of the electric power, and also in measuring systems of parameters of the electric power.

Reference

1. Sadullaev N.N., Shoboev A. H. 3D- matrix model of corporate power supply system. // the chief power-engineer. - Moscow, 2016. -#9, -C. 68-73.
2. Sadullaev N.N., Shoboev A. H., Bozorov M.B. The software of the matrix model of the electricity system enterprise". The certificate of the official registration of the computer program. Intellectual property agency Republic Uzbekistan. No. DGU 04159 from 30.12.2016.